EIW–K

Filter regulator with backflow function

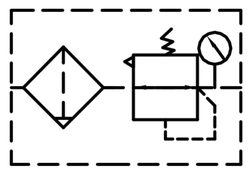

How to Order?

Series No.	Valve body size	Type code —	Port size	Drain Type	Pressure Gauge Code	Bracket code	Scale unit	Filter Precision —	Thread type
EIW:Regulator filter with square gauge	2000:2000 Series 3000:3000 Series 4000:4000 Series 5000:5000 Series	K: Backflow type	2000 01: 1/8 " 02: 1/4 " 3000 02: 1/4 " 03: 3/8 " 4000 03: 3/8 " 04: 1/2 " 06: 3/4 " 5000 06: 3/4 " 10: 1 "	Blank: Manual drain type C:Semi–auto drain D: Auto Drain type	Blank: With pressure gauge N: Without pressure gauge	Blank: With bracket J: Without bracket	1: Mpa 2: Bar 3: Psi	Blank: 25 μ m 5M: 5 μ m	Blank: G P : PT T : NPT

Order Example: Regulator filter with square gauge, 2000 series body , backflow type, 1/4" port , auto drain type, with gauge, with bracket, MPa, filter precision 5 μ m, G thread, ERP code is:EIW2000K–02D15M.

Note:
1. Backflow type regulator filter must work separately ; the knob must be upward, the air should be left port in and right port out.
2. 2000 series must work in case of knob upward and left port in & right port out Right port in & left port out is not available currently.
3. Standard 3000,4000,5000 series with backflow function must conform to above 1st point.If right port in & left port out was requested, EMC can customize it .

Specifications

Model	EIW2000K	EIW3000K	EIW4000K	EIW5000K
Working Medium	Clean air(After 40 μ m filtration)			
Proof pressure(MPa)	1.5			
Working Pressure Range(MPa)	0.15~1.0			
Pressure Ajdustment Range(MPa)	0.05~0.9			
Working temperature(℃)	–5~60 (No freezing)			
Filter precision	25 μ m/5 μ m optional			
Bowl material	PC(Polycarbonate)			
Bowl guard	None	Available		
Overpressure Exhaust Mechanism	With overflow			

Model	Rated flow(L/min) *	Port size *
EIW2000K–01	1078	1/8"
EIW2000K–02	1165	1/4"
EIW3000K–02	1998	1/4"
EIW3000K–03	2177	3/8"
EIW4000K–03	5108	3/8"
EIW4000K–04	5211	1/2"
EIW4000K–06	5900	3/4"
EIW5000K–06	6200	3/4"
EIW5000K–10	6400	1"

* Supply pressure 8.0Bar , Set pressure 6.3Bar ,and pressure difference 1 Bar, testing result shows that standard type and backflow type have same flow rate.
* G, PT, NPT is optional.

◎ Construction and working principle

Working principle:

1. When inlet pressure is higher than set pressure, one–way valve 10 closes, it works as a normal regulator.
2. When the inlet pressure blocked, the one–way valve 12 opens, pressure in diaphragm chamber exhausts from the inlet side . When diaphragm chamber pressure goes down, diaphragm is pushed down by the spring force, The valve core will be open by valve rod, pressure at the outlet side exhaust through the inlet side, it works as a regulator with backflow function.

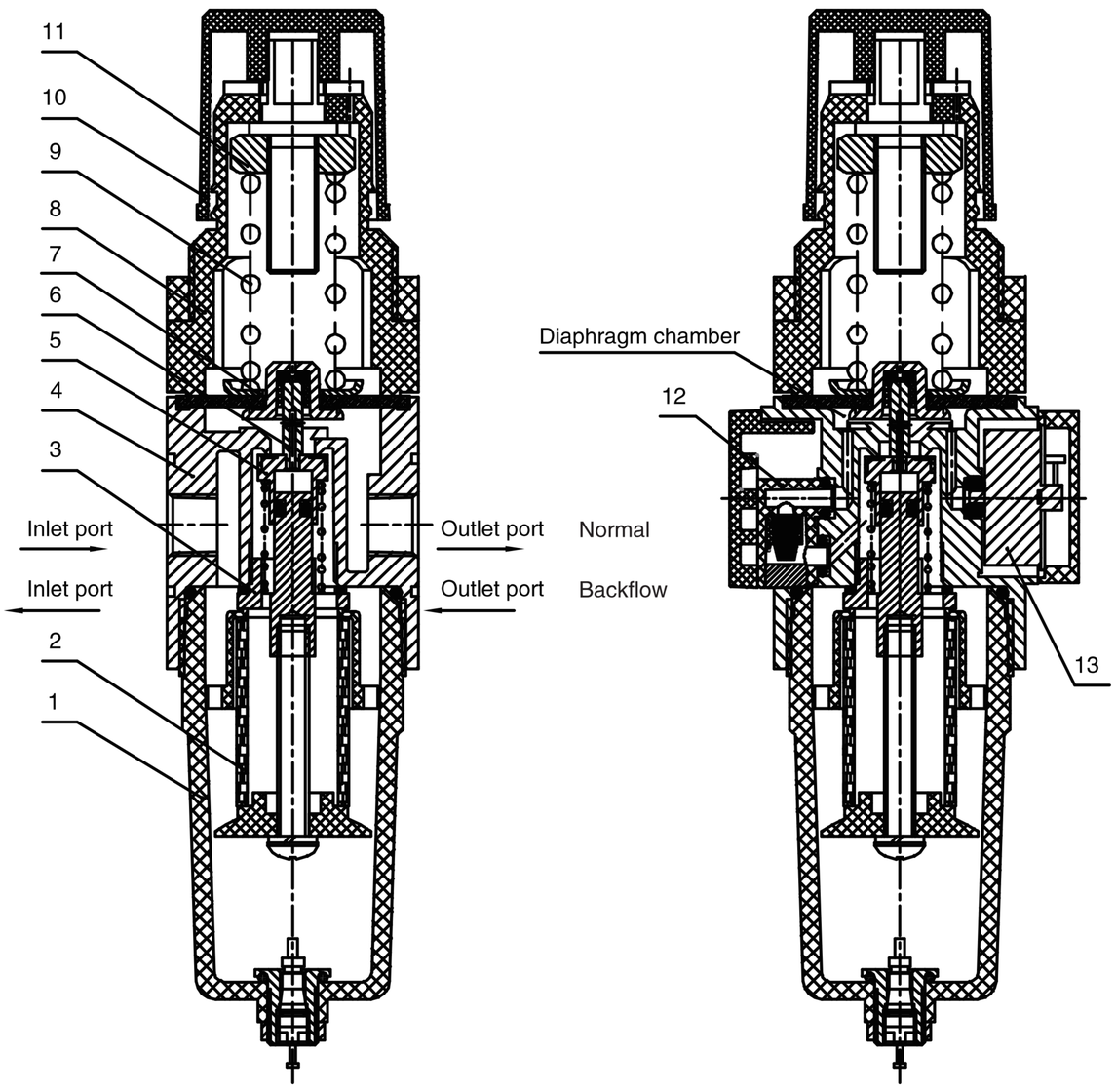

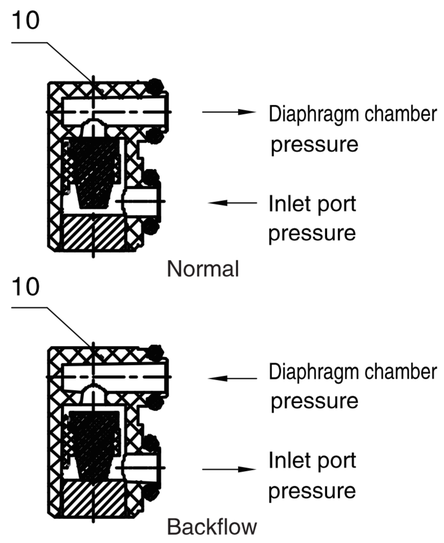

No.	Name	Material
1	Bowl components	Polycarbonate/Metal
2	Filter core	Brass
3	Relieving valve seat	Aluminium
4	Body	Aluminium
5	Valve core components	NBR/Metal
6	Valve spool	Brass
7	Diaphram components	NBR/Metal
8	Valve cover	Reinforce nylon (2000/3000)
		Aluminium(4000/5000)
9	Spring	SWC
10	Knob	Reinforce nylon
11	Adjustment bolt components	Free–cutting steel
12	One–way valve components	NBR/Plastic
13	Pressure gauge	Brass/Plastic

◎ Main Dimension

EIW2000K

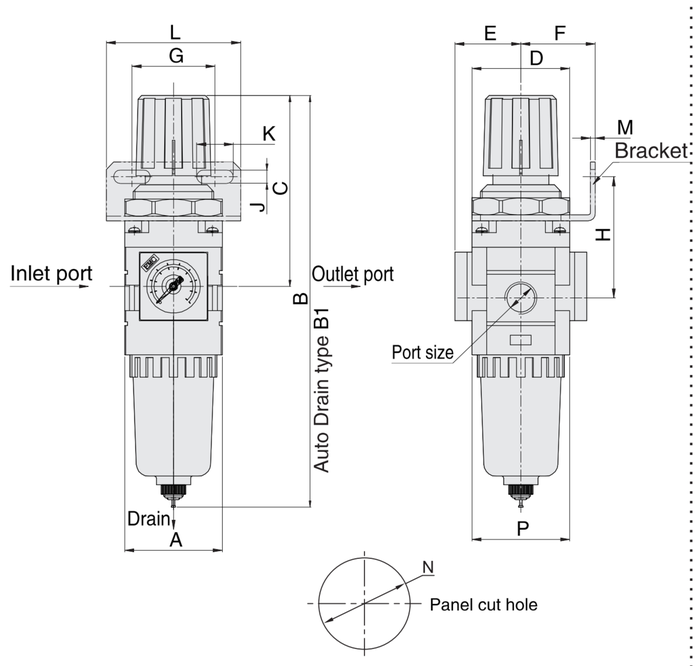

EIW3000K–EIW4000K

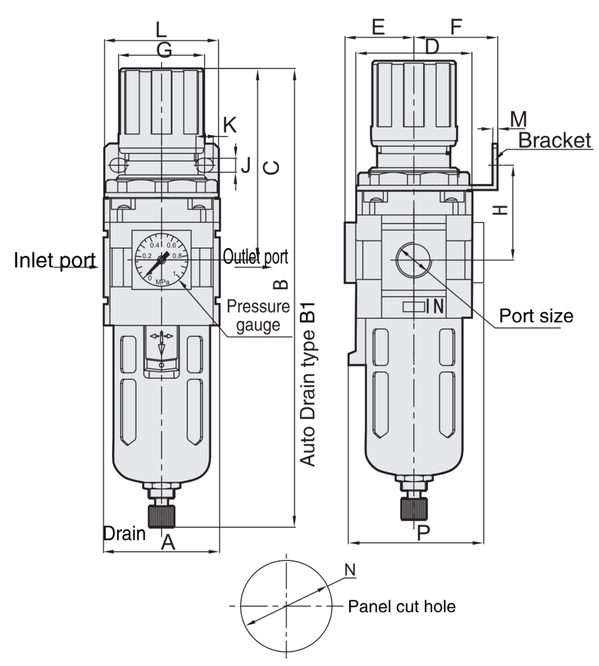

EIW5000K

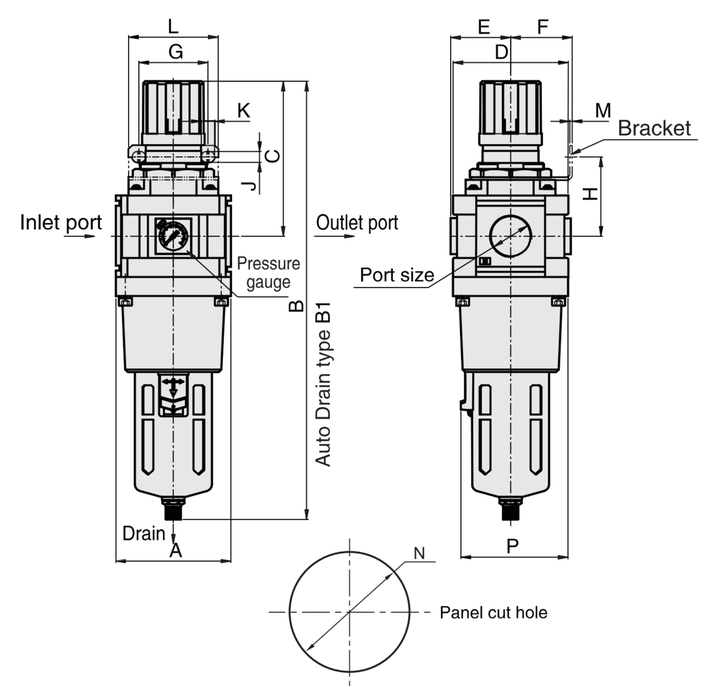

Model	Port size	A	B	B1	C	D	E	F	G	H	J	K	L	M	N	P
EIW2000K	1/8"–1/4"	40	168.5	205.5	78.5	40	27	30.5	33.5	49.5	5.4	15	55	2	33	40
EIW3000K	1/4"–3/8"	53	210.5	224.5	92	53	31.5	39	40	45.5	6.5	8	53	2	42	63
EIW4000K	3/8"–1/2"	70	264	267	113.5	70	40	48	53.5	54.5	8.5	10.5	70	2	52	73
EIW4000K–06	3/4"	90	343	348	116.5	90	47	48	53.5	62	8.5	10.5	70	2	52	84
EIW5000K	3/4"–1"	90	343	348	116.5	90	47	48	53.5	62	8.5	10.5	70	2	52	84

E•MC®

How to Order?

Series No.	Type Code	Body Size	Combination QTY	—	Port Size	Drain Type	Pressure Gauge Code	Bracket Code	Scale Unit	Filter Precision	— Thread Type
E: Round gauge series	C: Filter+regulator+ lubricator W: Filter+regulator F: Filter R: Regulator L: Lubricator	10: 1000 body 20: 2000 body 30: 3000 body 40: 4000 body 50: 5000 body	10: Two units (Regulator+Lubricator) 00: Others		1000 M5: M5 2000 01: 1/8 " 02: 1/4 " 3000 02: 1/4 " 03: 3/8 " 4000 03: 3/8 " 04: 1/2 " 06: 3/4 " 5000 06: 3/4 " 10: 1 "	Blank: Manual drain type C:Semi–auto drain D: Auto Drain type	Blank: With pressure gauge N: No pressure gauge	Blank: With bracket J: No bracket	4: Mpa/Psi(Default) 5: Bar/Psi	Blank: 25 μ m 5M: 5 μ m	Blank: G P : PT T : NPT

Order Example:

E series regulator, 2000 body size, 1/8 port size, with pressure gauge, with bracket, scale unit is Mpa/Psi, G thread, ERP code is: ER2000–01 4

Note:2000 Series is optional for manual /auto drain type;

Standard 3000/4000/5000 Series are optional for manual/semi–auto/semi–auto integrated drain type.

Air Preparation Unit Kits

ER

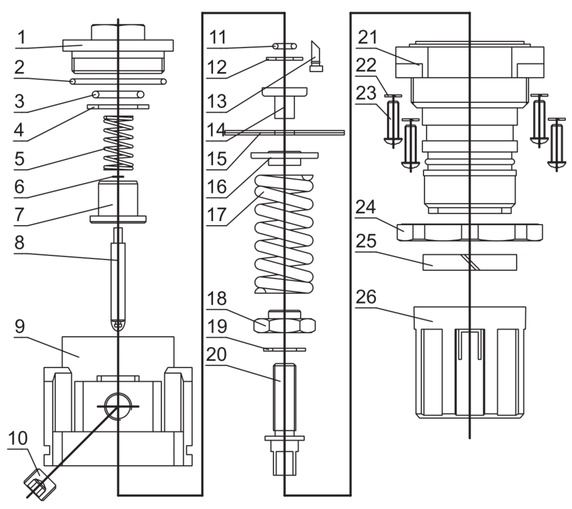

NO.	NAME	QTY	MATERIAL
26	Regulate handle	1	Reinforce nylon
25	Symbol ring	1	Reinforce nylon
24	Nut	1	Reinforce nylon
23	Cross screw	4	Carbon steel
22	Spring washer	4	Carbon steel
21	Valve cover	1	Reinforce nylon
20	Regulate bolt	1	Carbon steel
19	Washer	1	POM
18	Regulate Nut	1	Carbon steel
17	Spring	1	Carbon steel
16	Spring seat	1	Carbon steel
15	Diaphragm	1	NBR
14	Diaphragm seat	1	Brass
13	Pipe	1	POM
12	Retamer ring	1	Carbon steel
11	O–ring	1	NBR
10	Plug	1	Carbon steel
9	Valve body	1	Aluminum
8	Spool	1	Brass+ NBR
7	Valve core	1	Brass
6	Retainer ring	1	Carbon steel
5	Spring	1	Stainless steel
4	Washer	1	Carbon steel
3	O–ring	1	NBR
2	O–ring	1	NBR
1	Regulator seat	1	ZZnAl4–1

EF

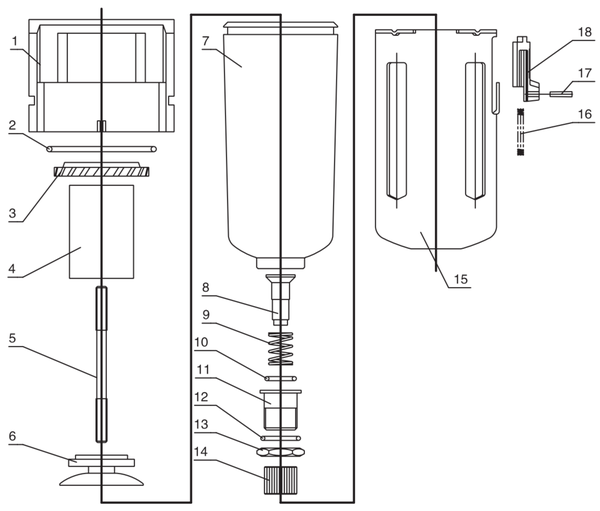

NO.	NAME	QTY	MATERIAL
18	Lock	1	ABS
17	Pin	1	ABS
16	Spring	1	Stainless steel
15	Metal bowl	1	Carbon steel
14	Nut	1	Cu
13	Hex Nut	1	Cu
12	O–ring	1	NBR
11	Drain valve	1	Cu
10	O–ring	1	NBR
9	Spring	1	Stainless steel
8	Valve core	1	Cu
7	Water cup	1	Polycarbonate
6	Drain board	1	ABS
5	Bolt	1	Carbon steel
4	Filter element	1	Cu
3	Blade	1	ABS
2	O–ring	1	NBR
1	Regulator body	1	Aluminum

EL

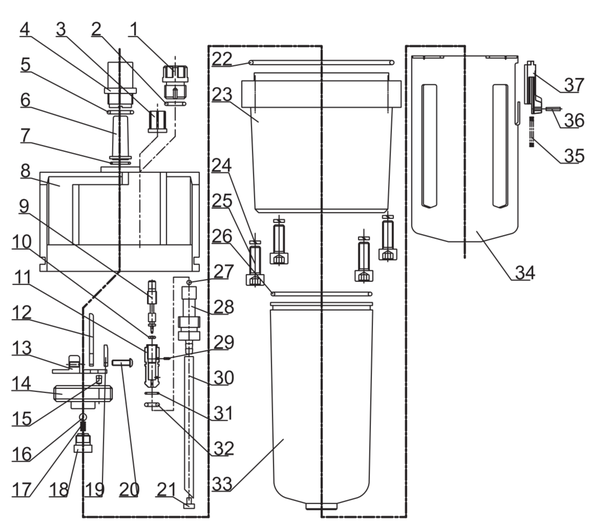

NO.	NAME	QTY	MATERIAL
37	Lock	1	ABS
36	Pin	1	ABS
35	Spring	1	Stainless steel
34	Bowl guard	1	Carbon steel
33	Oil cup	1	Polycarbonate
32	O–ring	1	NBR
31	O–ring	1	NBR
30	Oil tube	1	PU
29	Pin	1	Carbon steel
28	Fitting	1	POM
27	Steel ball	1	Carbon steel
26	O–ring	1	NBR
25	Hex screw	4	Carbon steel
24	Spring washer	4	Carbon steel
23	Middle part	1	Aluminum
22	O–ring	1	NBR
21	Filter element	1	Brass
20	Screw	2	Carbon steel
19	Reed seat board	1	ZZnAl4–1
18	One way valve plate	1	Cu
17	Spring	1	Stainless steel
16	Steel ball	1	Carbon steel
15	Small hole seat	1	Brass
14	Bracket	1	ZZnAl4–1
13	Reed seat	1	ZZnAl4–1
12	Reed	1	Polycarbonate
11	Oil regulate valve seat	1	Brass
10	O–ring	1	NBR
9	Regulate needle	1	Brass
8	Lubricator body	1	Aluminum
7	O–ring	1	NBR
6	Oil drop tube	1	Polycarbonate
5	O–ring	1	NBR
4	Oil window	1	Polycarbonate
3	Oil regulate screw	1	ABS
2	O–ring	1	NBR
1	Plug	1	ABS

EW

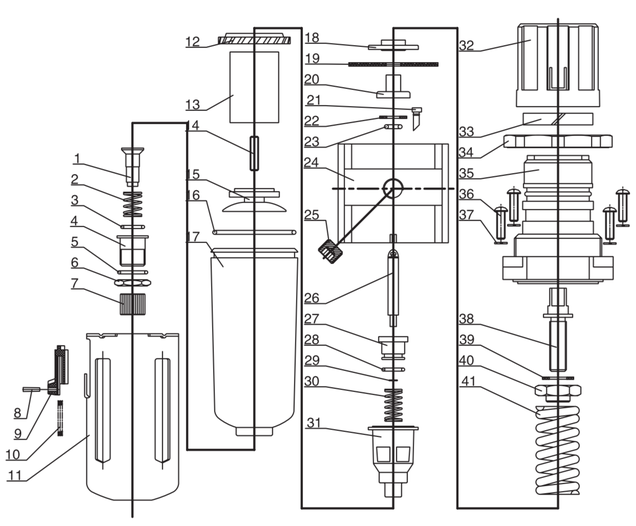

NO.	NAME	QTY	MATERIAL
41	Spring	1	Carbon steel
40	Regulate Nut	1	Carbon steel
39	Washer	1	POM
38	Regulate Bolt	1	Carbon steel
37	Spring washer	4	Carbon steel
36	Cross screw	4	Carbon steel
35	Valve cover	1	Reinforce nylon
34	Nut	1	Reinforce nylon
33	Symbol ring	1	Reinforce nylon
32	Regulate handle	1	Reinforce nylon
31	Overflow valve seat	1	ZZnAl4–1
30	Spring	1	Stainless steel
29	Retainer ring	1	Carbon steel
28	O–ring	1	NBR
27	Valve core	1	Brass
26	Spool	1	Brass + NBR
25	Plug	1	Carbon steel
24	Regulator Body	1	Aluminum
23	O–ring	1	NBR
22	Retainer ring	1	Carbon steel
21	Pipe	1	POM
20	Diaphragm seat	1	Brass
19	Diaphragm	1	NBR
18	Diaphragm Pallet	1	Carbon steel
17	Water cup	1	Polycarbonate
16	O–ring	1	NBR
15	Drain board	1	ABS
14	Bolt	1	Carbon steel
13	Filter element	1	Brass
12	Whirlwing blade	1	ABS
11	Bowl guard	1	Carbon steel
10	Spring	1	Stainless steel
9	Lock	1	ABS
8	Pin	1	ABS
7	Nut	1	Brass
6	Hex Nut	1	Brass
5	O–ring	1	NBR
4	Drain valve	1	Brass
3	O–ring	1	NBR
2	Spring	1	Stainless steel
1	Valve core	1	Brass