SQ

Compact Cylinder(Long Stroke Type)

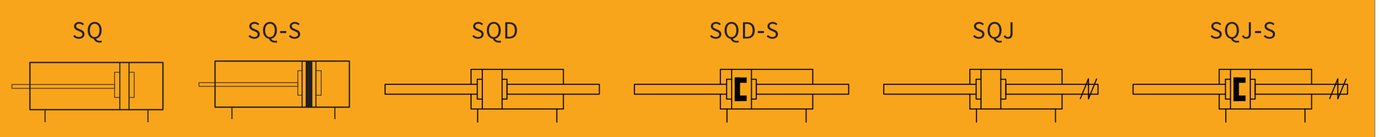

Specifications

Bore(mm)	32	40	50	63	80	100
Acting type	Double Acting/Single Acting					
Working medium	Clean Air(40 μ m filteration)					
Working pressure(MPa)	0.1~1.0(Double acting) / 0.2~1.0(Single acting)					
Garanteed pressure(MPa)	1.5					
Working temperature(℃)	–20~70(No freezing)					
Speed range(mm/s)	30~500					
Cushion type	Rubber cushion					
Port size ❶	G1/8		G1/4		G3/8	

❶ PT、NPT port size is optional.

How to Order?

Series No – Type No. – Bore X Stroke – Adjustable Stroke – Magnet No – Piston Rod Thread Type – Thread Type

- Series No: SQA (Thread type)
- Type No.: Blank: Basic type; D: Double shaft type; J: Double shaft and adjustable stroke type
- Bore: 32, 40, 50, ..., 100
- Stroke: Details in stroke chart
- Adjustable Stroke: 10, 20, 30, 40, 50, 75, 100
- Magnet No: Blank: No magnet; S: With magnet
- Piston Rod Thread Type: Blank: Female thread; M: Male thread
- Thread Type: Blank: G; P: PT; T: NPT

Order Example:

SQA Series basic type cylinder，40mm bore ，125mm stroke ,with magnet，male thread on piston rod，G thread，
ERP code is：SQA40X125–S–M

Optional Accessories

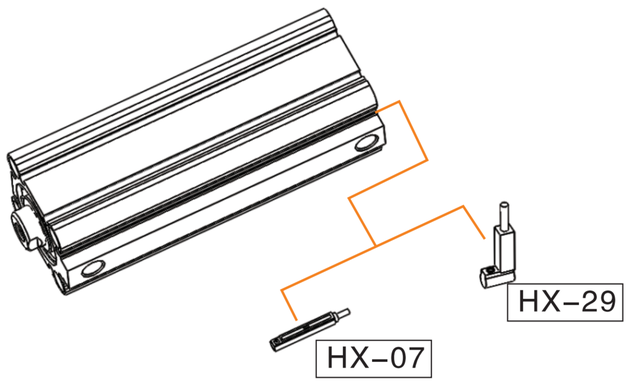

Note:Short stroke please use HX–29 series due to limited space.

Stroke

Bore (mm)	Standard Stroke (mm)	Max. Stroke (mm)
32 40 50 63	125 150 175 200 250 300	300
80 100	125 150 175 200 250 300 350	350

Note: The dimensions of non–std stroke cylinder has the same dimensions as the next longer stroke std. stroke cylinder.
e.g. 115mm stroke cylinder has the same dimensions of 125 std. stroke cylinder.

Internal Structure

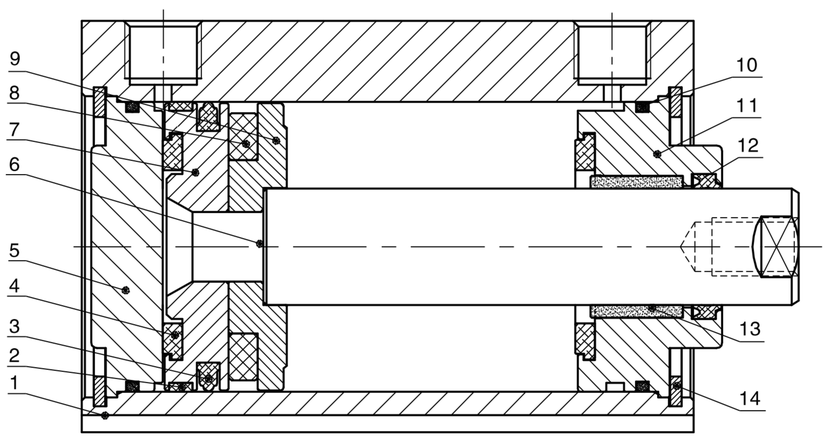

No.	Part Name	Material
1	Barrel	Aluminum alloy
2	Wear ring	PTEE
3	Piston seal	NBR
4	Anti–bump cushion	NBR/TPU
5	Rear cover	Aluminum alloy
6	Piston rod	S45C hard chrome carbon steel
7	Piston	Aluminum alloy
8	Magnet	Plasic
9	Magnet base	Aluminum alloy
10	O–ring	NBR
11	Head cover	Aluminum alloy
12	Piston rod seal	TPU
13	Self lubricating bearing	Bronze powder
14	C–type retainer ring	Spring steel

E·MC®

◎ Main Dimension

SQA32~SQA100(S>100)

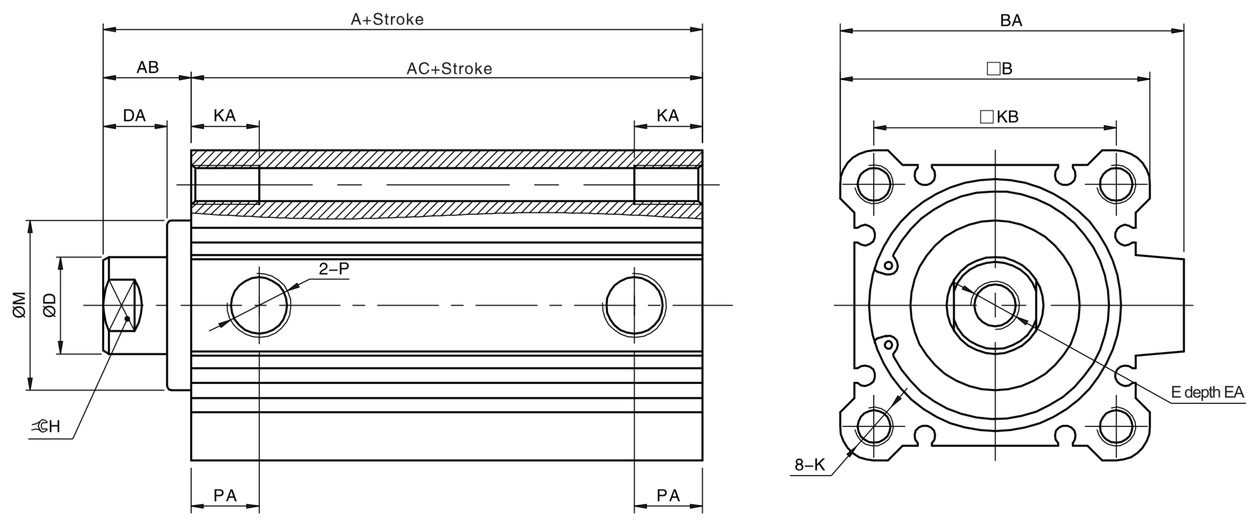

Bore/Sign	A	AB	AC	B	BA	D	DA	E	EA	H	K	KA	KB	M	P	PA
32	62.5	17	45.5	45	49.5	16	12	M8X1.25	13	14	M6X1.0	17	34	22	1/8"	12.5
40	72	17	55	52	57	16	12	M8X1.25	13	14	M6X1.0	17	40	28	1/8"	14
50	73.5	18	55.5	64	71	20	13	M10X1.5	15	17	M8X1.25	22	50	35	1/4"	14
63	75	18	57	77	84	20	13	M10X1.5	15	17	M10X1.5	27	60	35	1/4"	16.5
80	86	20	66	98	104	25	15	M16X2.0	21	22	M12X1.75	32	77	43	3/8"	19
100	97.5	22	75.5	117	123.5	32	17	M20X2.5	27	27	M12X1.75	33	94	59	3/8"	23

Note:With magnet and without magnet ,the dimensions are same.

SQAD32~SQAD100(S>100)

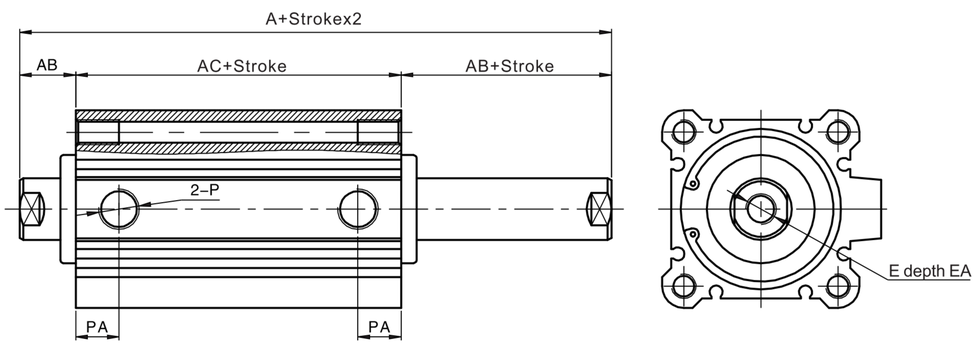

SQAJ32~SQAJ100(S>100)

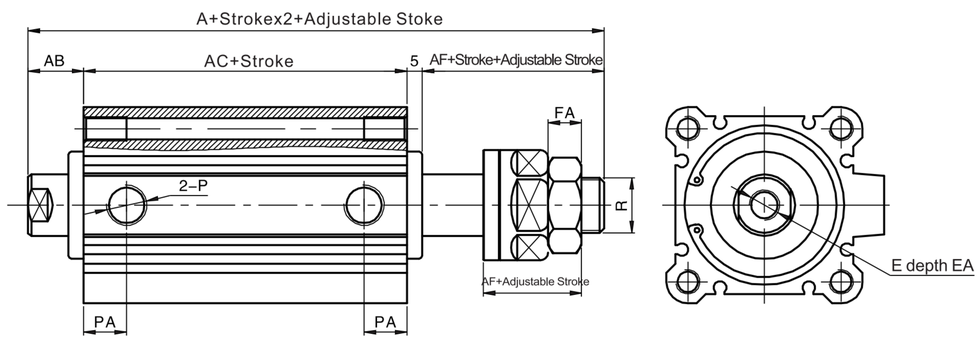

Bore/Sign	A(SQAD)		A(SQAJ)		AB	AC		AF	E	EA	FA	PA	R
	No magnet	With magnet	No magnet	With magnet		Standard	With magnet						
32	79.5	89.5	97.5	107.5	17	45.5	55.5	30	M8X1.25	13	8	12.5	M14X1.5
40	89	99	106	116	17	55	65	29	M8X1.25	13	8	14	M14X1.5
50	91.5	101.5	110.5	120.5	18	55.5	65.5	32	M10X1.5	15	11	14	M18X1.5
63	93	103	112	122	18	57	67	32	M10X1.5	15	11	16.5	M18X1.5
80	106	116	128	138	20	66	76	37	M16X2.0	21	13	19	M22X1.5
100	119.5	129.5	139.5	149.5	22	75.5	85.5	37	M20X2.5	27	13	23	M26X1.5

◎ Dimension of Male Thread

Φ32~Φ100(S>100)

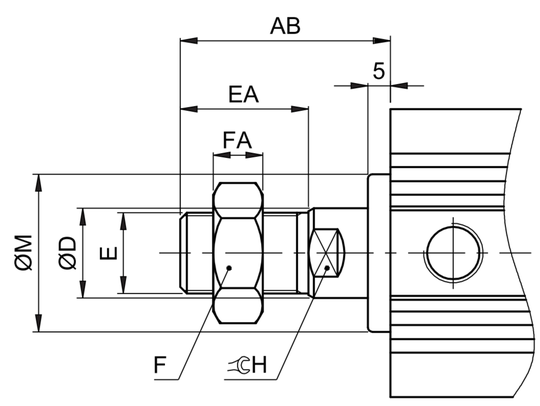

Bore/Sign	AB	D	E	EA	FA	F	H	M
32	38.5	16	M14X1.5	23.5	8	19	14	22
40	38.5	16	M14X1.5	23.5	8	19	14	28
50	43.5	20	M18X1.5	28.5	11	27	17	35
63	43.5	20	M18X1.5	28.5	11	27	17	35
80	53.5	25	M22X1.5	35.5	13	32	22	43
100	53.5	32	M26X1.5	35.5	13	36	27	59